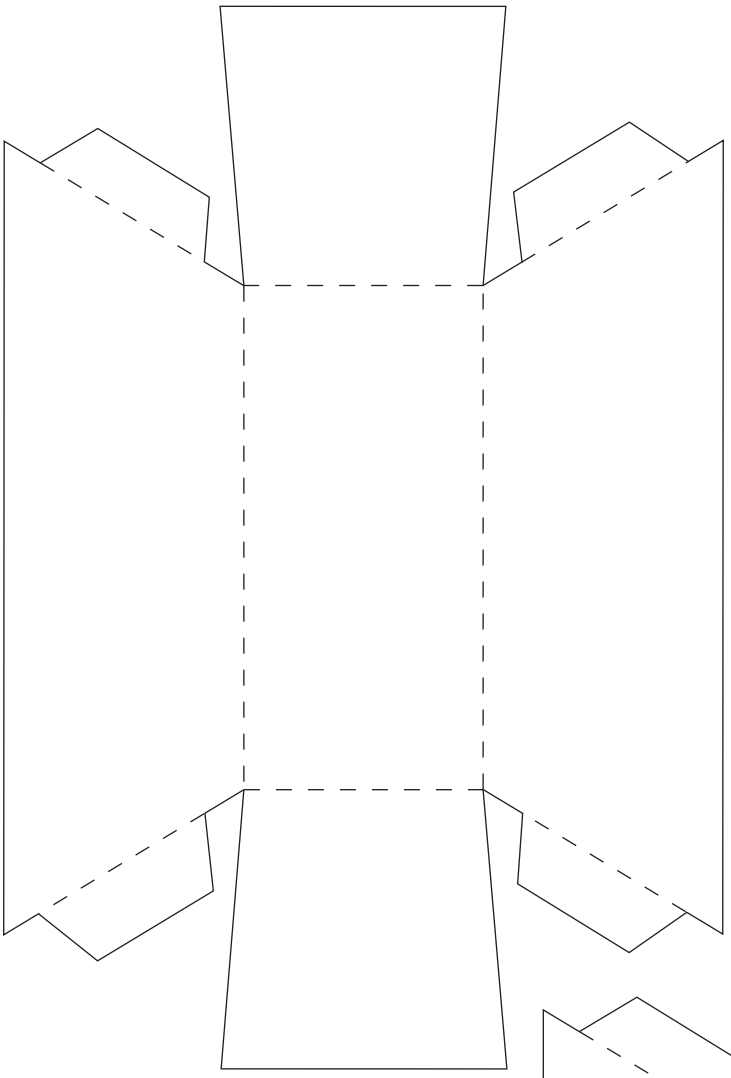

Cut the basket base from this blank area I used a nestabilities long scalloped rectangle - the one that's next up from the smallest die.

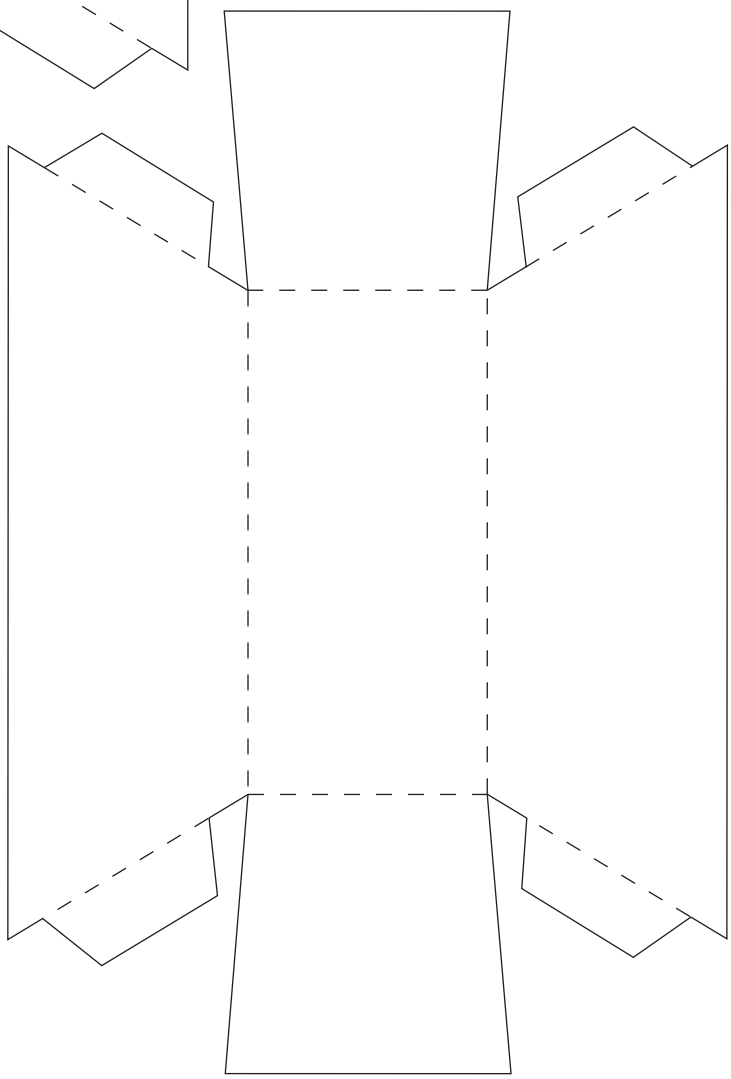

Cut the basket handle from along this edge of the cardstock - cut a half inch strip from the full height of the cardstock and score it a half inch from each end

THIS PAGE:
Basket exteriors x 2

NEXT PAGE:
Basket liners x 2

Easter Mini Long Basket

Design © Claire Brennan 2009
Waltzingmouse Makes
For personal use only

Remember - If you are printing this onto pale cardstock - set your printer so that it prints as a light grey and not black because you don't want to see black lines at the top of the box.

You might prefer to cut out the lining piece using the guidelines and then flip it over and stamp on the reverse so that you don't have any guidelines visible.

http://waltzingmouse.blogspot.com/

Use a pair of scallop edge scissors or a corner rounder with guide removed to cut scallops along the edges marked with this symbol. *

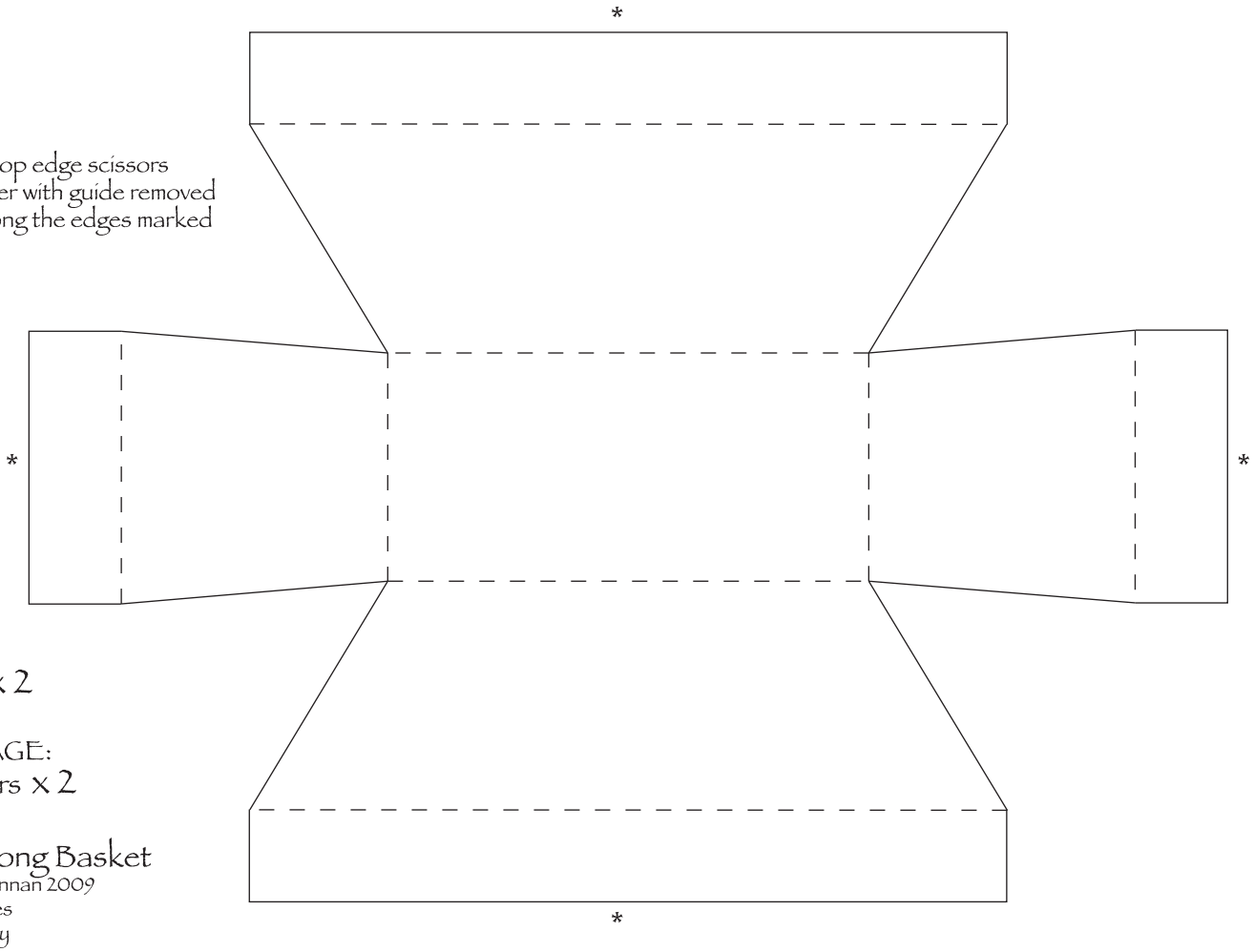

THIS PAGE:
Basket liners x 2

PREVIOUS PAGE:
Basket exteriors x 2

Easter Mini Long Basket

Design © Claire Brennan 2009
Waltzingmouse Makes
For personal use only

Remember - If you are printing this onto pale cardstock - set your printer so that it prints as a light grey and not black because you don't want to see black lines at the top of the box.

You might prefer to cut out the lining piece using the guidelines and then flip it over and stamp on the reverse so that you don't have any guidelines visible.

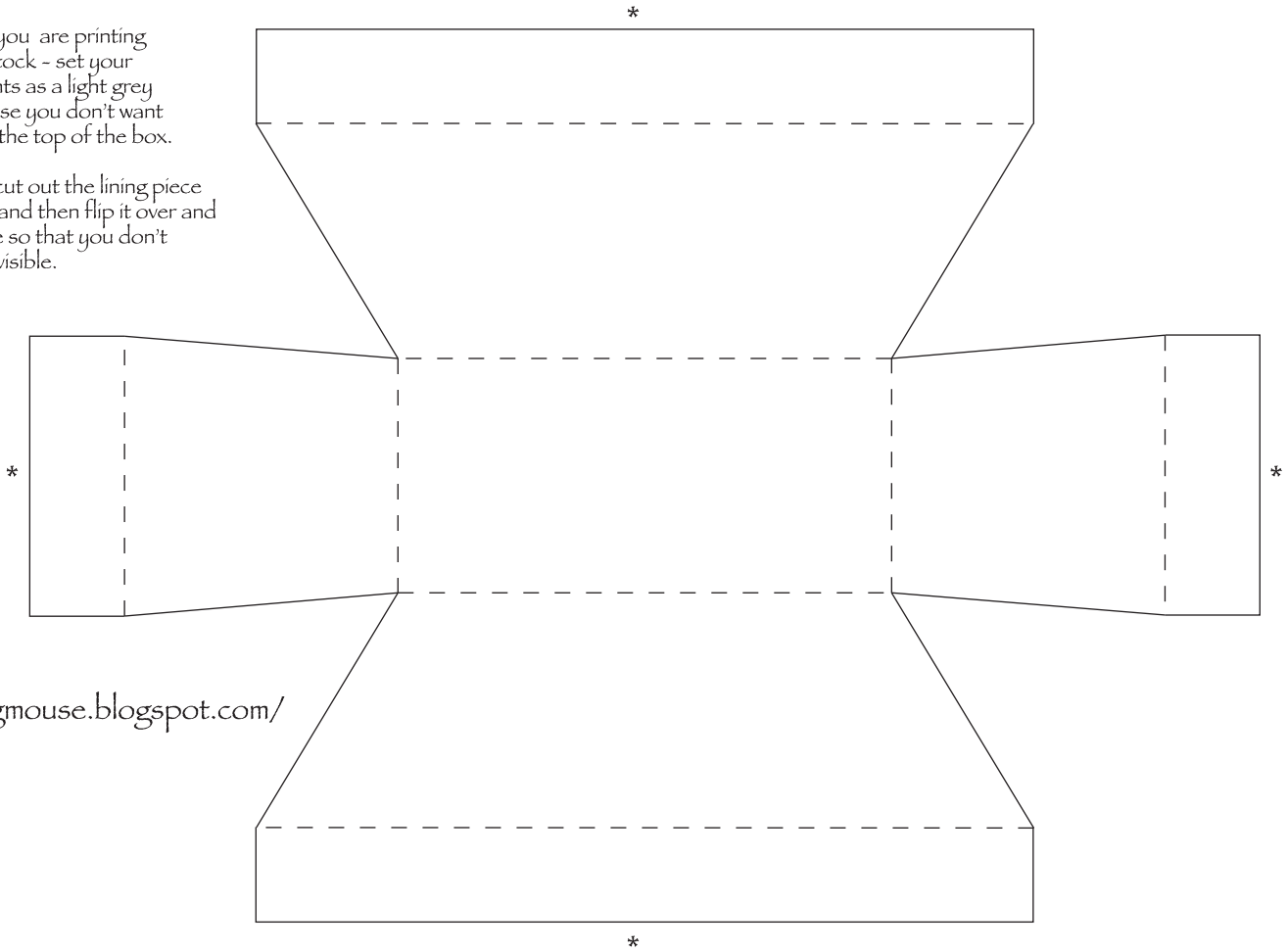

http://waltzingmouse.blogspot.com/